TAPS & FITTINGS UNIVERSAL TAPS & FITTINGS

PRODUCT INFORMATION

1 . POSITION

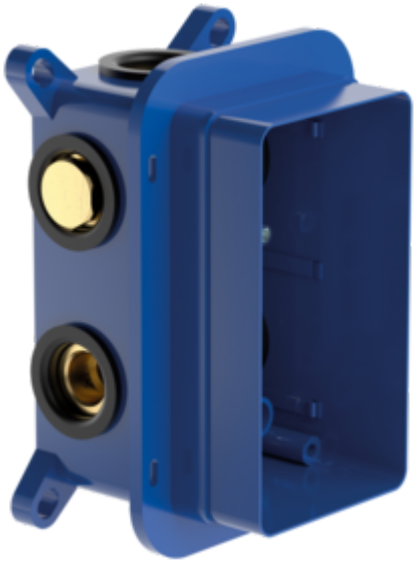

Article number	**TVD00065100000**
Article title	Villeroy & Boch Universal Taps & Fittings Vi-Box concealed thermostat installation unit with security lock for wall-mounted Angular
Product designation	Vi-Box concealed thermostat installation unit with security lock
Collection	Universal Taps & Fittings
Assembly / Assembly type	wall-mounted
Scope of delivery	1 x installation unit , 1 x fastening 1 x installation instructions
Length in mm	106
Width in mm	115
Height in mm	178
Weight in kg	1,65
Material	Plastic
EAN number	4051202465698
Material	Plastic
Volume	4,974
Swivel aerator	No
Thermostat	No
Cool Tap	No

TECHNICAL DRAWINGS

TVD00065100000

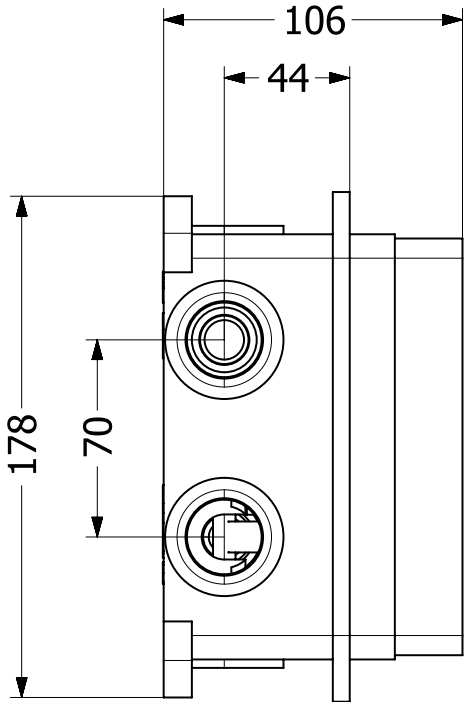

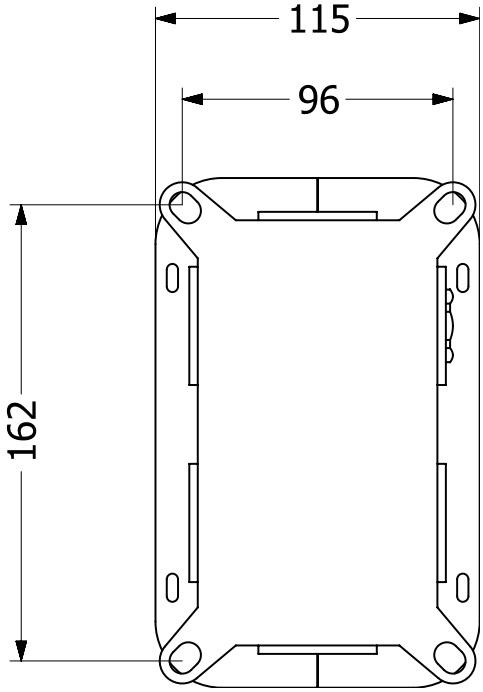

FLOW CHART

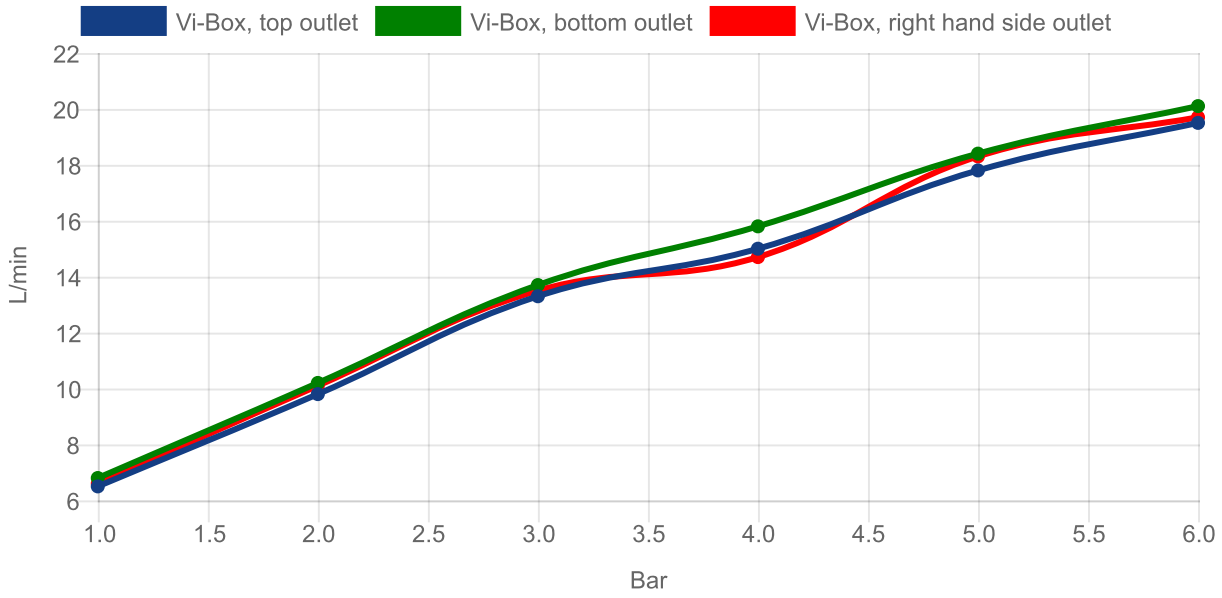
Vi-Box, top outlet
Vi-Box, bottom outlet
Vi-Box, right hand side outlet
L/min
22
20
18
16
14
12
10
8
6
1.0
1.5
2.0
2.5
3.0
3.5
4.0
4.5
5.0
5.5
6.0
Bar