TAPS & FITTINGS O.NOVO

PRODUCT INFORMATION

1 . POSITION



Article number	**TVB10420111061**
Article title	Villeroy & Boch O.novo Single-lever bidet mixer, Chrome
Product designation	Single-lever bidet mixer
Collection	O.novo
Assembly / Assembly type	Deck-mounted
Scope of delivery	1 x tap fitting , 1 x aerator key 1 x outlet fitting 1 x fastening 2 x connecting hoses 1 x installation instructions
Length in mm	144
Width in mm	43
Height in mm	130
Weight in kg	1,43
Material	Brass
Surface	glossy
Colour name	Chrome
EAN number	4051202465315
Air plus	An aerator enriches the water with air for a particularly soft, water-saving jet
Aqua smart	Sustainable, limited water flow: saving water without sacrificing on performance
Length of spout in mm	121
Material	Brass
Volume	6,552
Angle jet regulator	15
Cartridge	Cartridge with ceramic discs
Swivel aerator	No
Thermostat	No
Cool Tap	No
Spray types	Comfort jet

COLOUR

COLOUR DESIGNATION



Chrome

TECHNICAL DRAWINGS

TVB10420111061

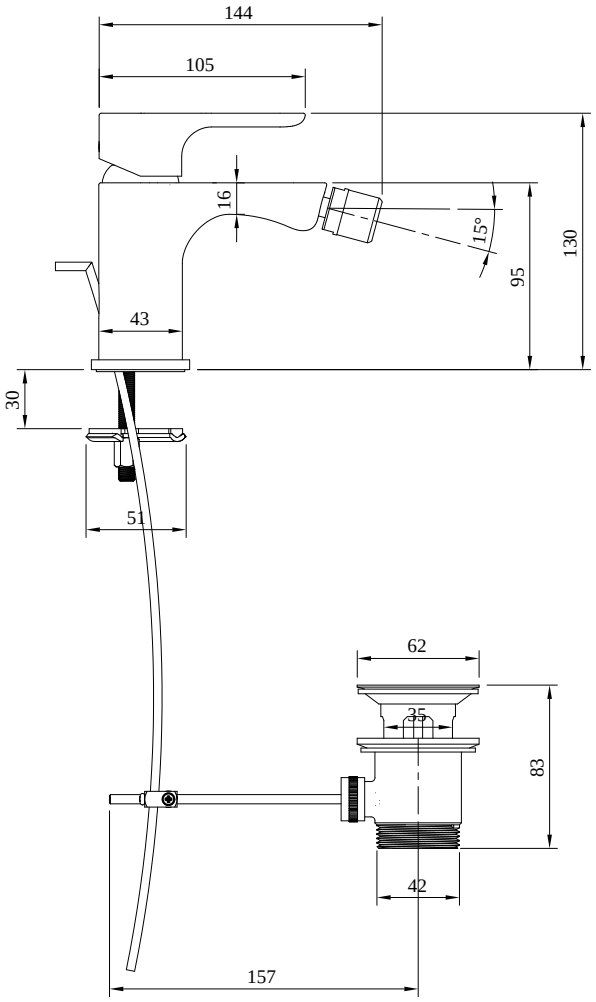

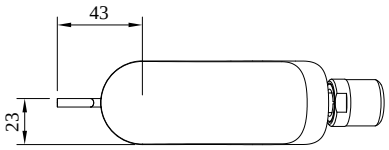

CHARACTERISTICS

An aerator enriches the water with air for a particularly soft, water-saving jet

Sustainable, limited water flow: saving water without sacrificing on performance

FLOW CHART

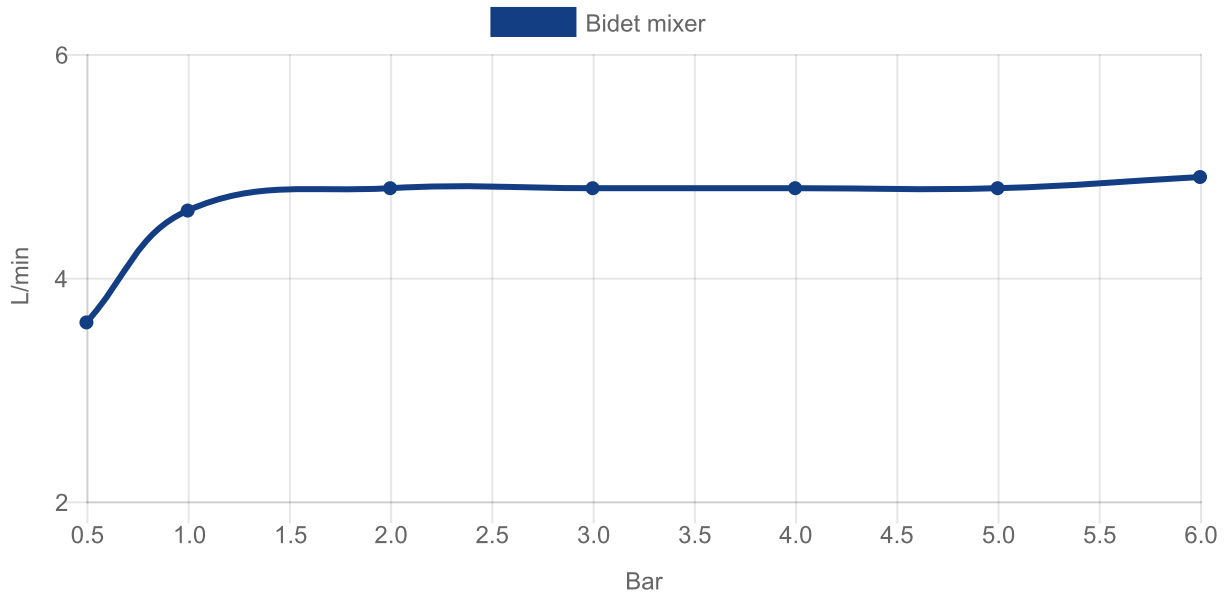

EXPLOSION DRAWINGS

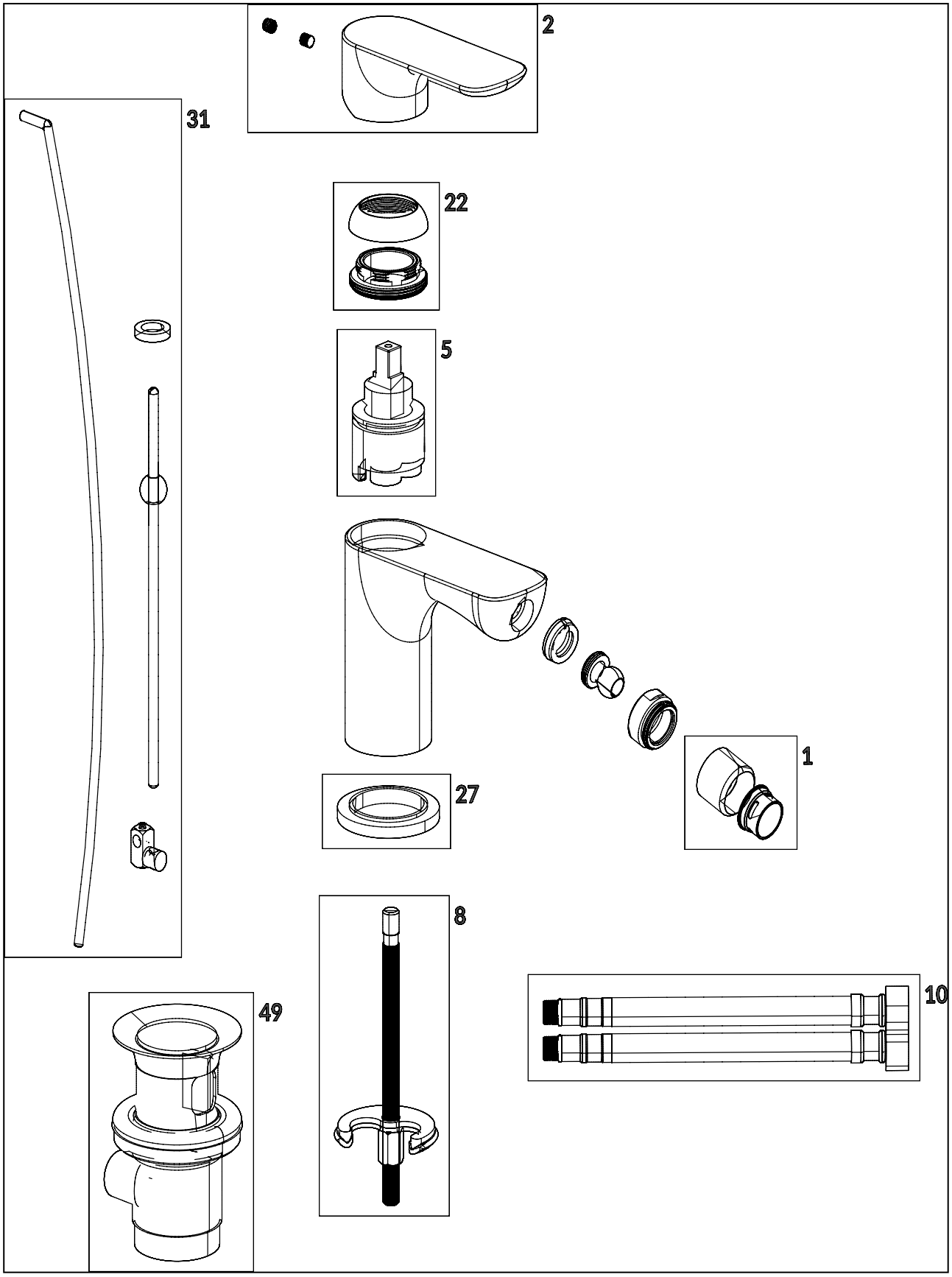

BILL OF MATERIALS

No.	Article No.	Description	Quantity
5	TVP00000105000	Cartridge	1
10	TVP00000702000	Connecting hoses	1
1	TVP00001400000	Aerator	1
49	TVP00000201061	Waste system	1
8	TVP00000601000	Fastening set	1
2	TVP10400409061	Handle set	1