BATHROOM FURNITURE SUBWAY 3.0

PRODUCT INFORMATION

1 . POSITION



Article number	**A46316BC**
Article title	Villeroy & Boch Subway 3.0 Mirror, with lighting, 1600 x 750 x 47,5 mm
Product designation	Mirror
Collection	Subway 3.0
Assembly / Assembly type	wall-mounted
Equipment	1 x aluminium frame
Scope of delivery	1 x mirror , 1 x fastening set
Depth in mm	47,5
Width in mm	1600
Height in mm	750
Weight in kg	18,40
express delivery	Yes
Function	with lighting
Material front	mirror glass
Surface of front	Mirror glass
Material body	aluminium
Operating mode	Mains-operated
Energy detection	, This light contains replaceable LED lamps. The lamps in the light can be replaced.
Lighting	1x LED
Power of lamp	1 x LED / 40.8 W
Light colour (designation & colour temperature)	2700 K (warm white) to 6500 K (daylight white)
Lighting control	with sensor dimmer
Degree of protection	IP 44
EAN number	4062373838655
General information	• After retrofitting with the ZigBee Home Automation Kit C004 00, lighting can be controlled via your Smart Home environment. The illuminated mirror can be switched on and off via the sensor switch. • The mirror can be connected via the ZigBee Home Automation Standard with all hubs/gateways that use this transmission standard, such as Philips Hue Bridge or suitable Amazon Echo models.

COLOUR

COLOUR DESIGNATION



BiColour (Black Matt, White Matt)

A46316BC

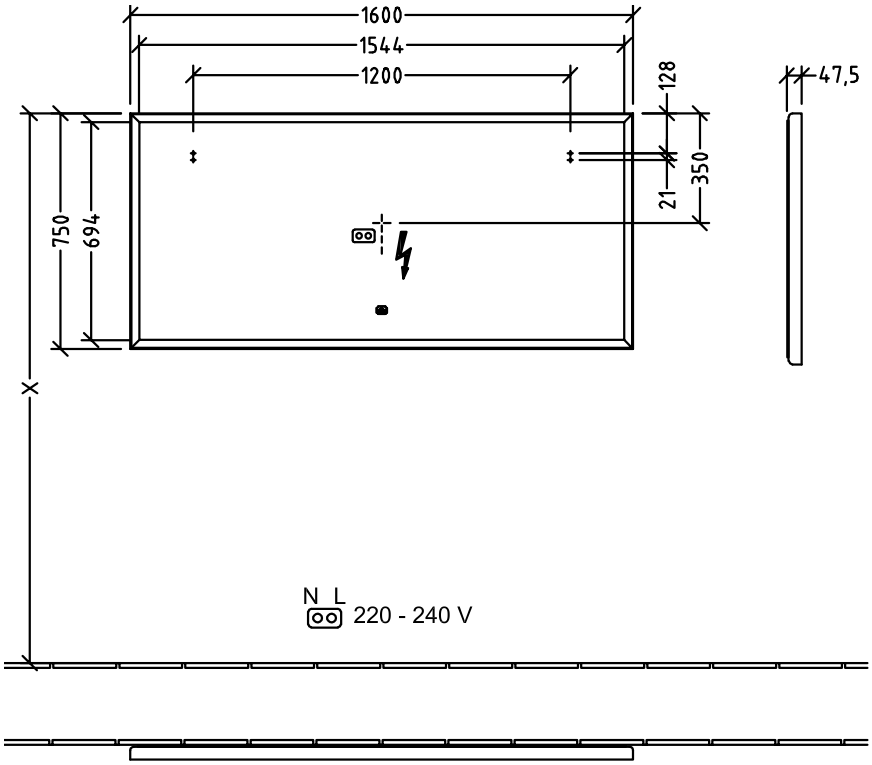

Subway 3.0 A46316YY	Villeroy & Boch 1748
V01 / 10.12.2020	