# ACCESSORIES SUBWAY

## PRODUCT INFORMATION

1 . POSITION



| **Article number** | **772311R1** |
|---|---|
| Article title | Villeroy & Boch Subway Cistern, water inlet from the sides or rear, White Alpin CeramicPlus |
| Product designation | Cistern |
| Collection | Subway |
| Scope of delivery | 1 x cistern |
| Length in mm | 155 |
| Width in mm | 388 |
| Height in mm | 385 |
| Weight in kg | 15,42 |
| Inlet | water inlet from the sides or rear |
| Material | Sanitary ceramics |
| Colour name | White Alpin CeramicPlus |
| Other material | Push button: ABS Flushing mechanism: Plastic |
| Other surfaces | Push button: chrome, glossy, Flushing mechanism: glossy |
| EAN number | 4022693616012 |

## COLOUR

**COLOUR DESIGNATION**

White Alpin

## TECHNICAL DRAWINGS

**772311R1**

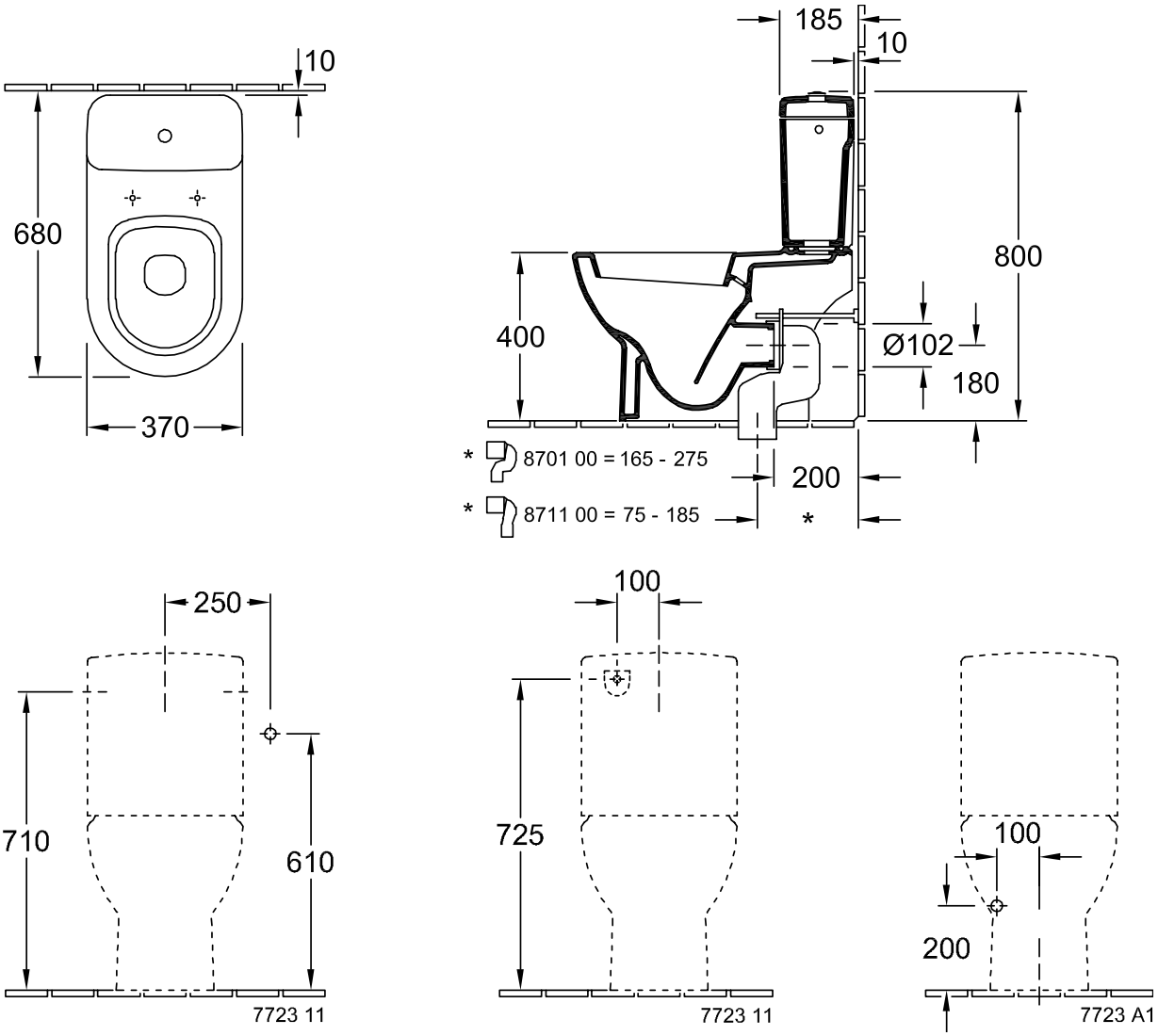

## EXPLOSION DRAWINGS

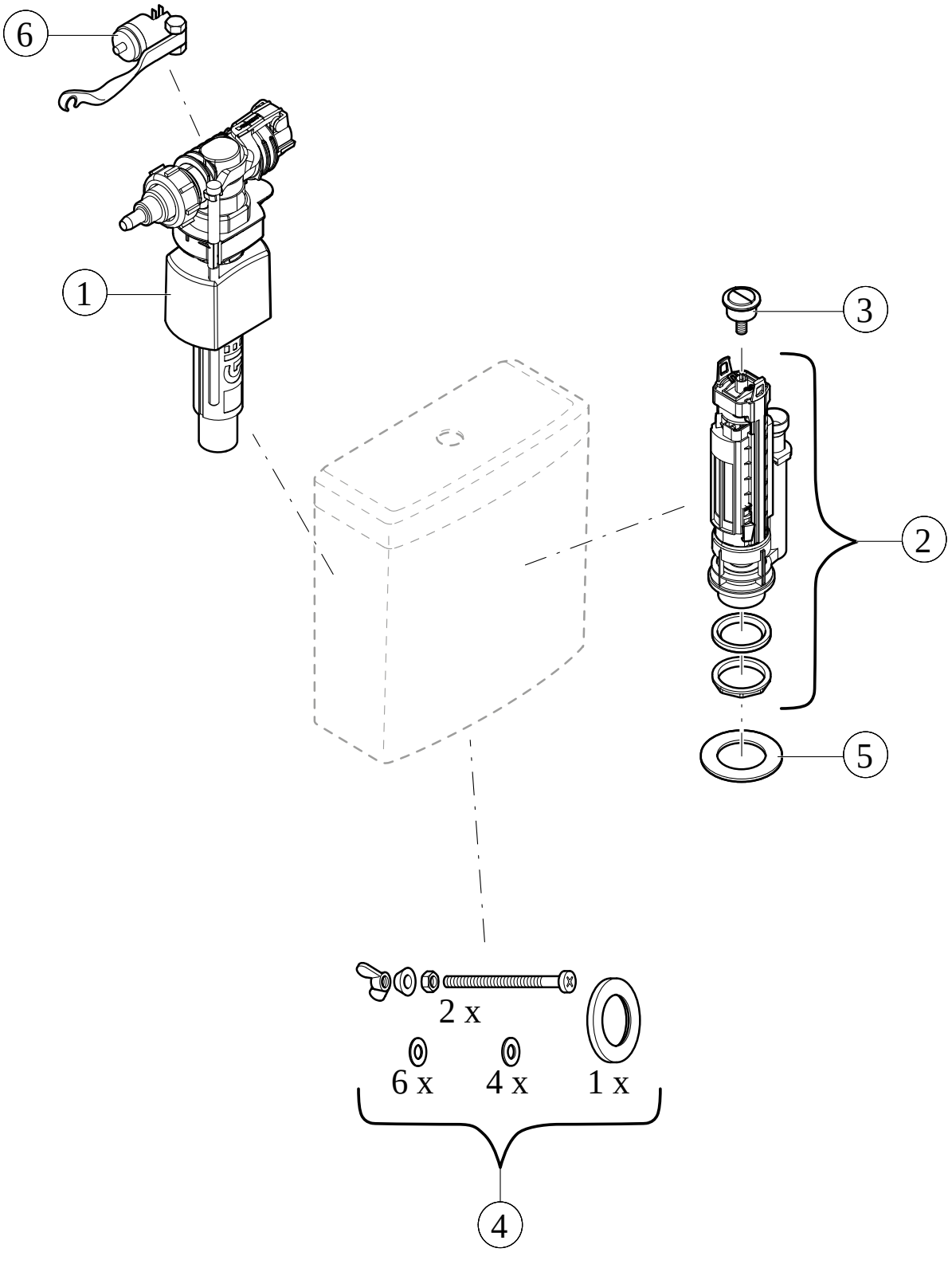

## BILL OF MATERIALS

| No. | Article No. | Description | Quantity |
|---|---|---|---|
| 0 | 92071100 | Stop valve with rosette | 1 |
| 0 | 92020001 | Plugs and cover caps | 1 |
| 0 | 92071200 | Copper pipe | 1 |