TOILET ARCHITECTURA

PRODUCT INFORMATION

1 . POSITION



Article number	**5685HRR1**
Article title	Villeroy & Boch Architectura Combi-Pack, wall-mounted, with DirectFlush, White Alpin CeramicPlus
Product designation	Combi-Pack
Collection	Architectura
Assembly / Assembly type	wall-mounted
Assembly instructions	not suitable for installation with flush valves
Scope of delivery	1 x washdown toilet, rimless , 1 x toilet seat and cover
Length in mm	530
Width in mm	370
Height in mm	316
Weight in kg	22,50
Suitable for	Concealed cistern
Rimless	Yes
Innovative flushing technology (with TwistFlush)	No
Flush type	Washdown toilet
Flush volume l	3 / 4,5 l
Outlet / outlet	horizontal outlet
Wall-mounted - floor-standing	wall-mounted
Function	• with automatic lowering mechanism (SoftClosing) • with removable seat (QuickRelease)
Leed	4
Material	Sanitary ceramics
Colour name	White Alpin CeramicPlus
Other material	Toilet seat and cover: Duroplast
Other surfaces	Toilet seat and cover: glossy
EAN number	4051202373535

COLOUR

COLOUR DESIGNATION

White Alpin

TECHNICAL DRAWINGS

5685HRR1

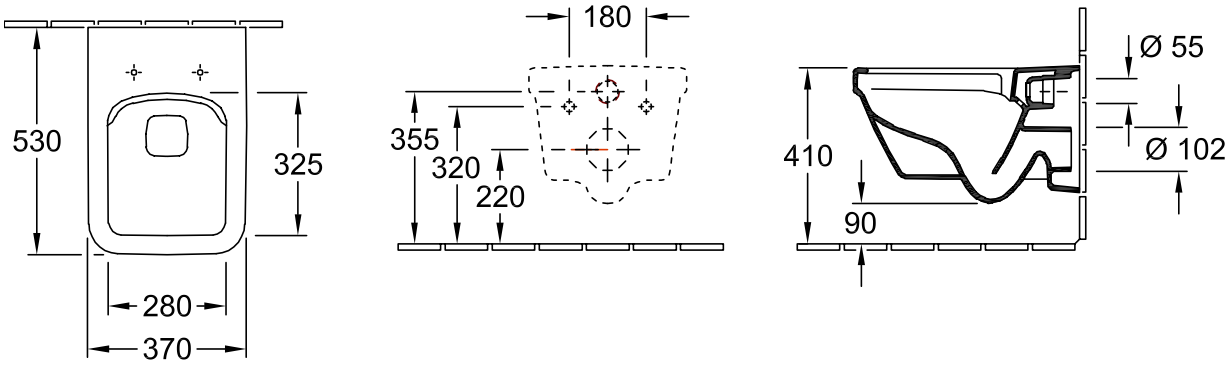

EXPLOSION DRAWINGS

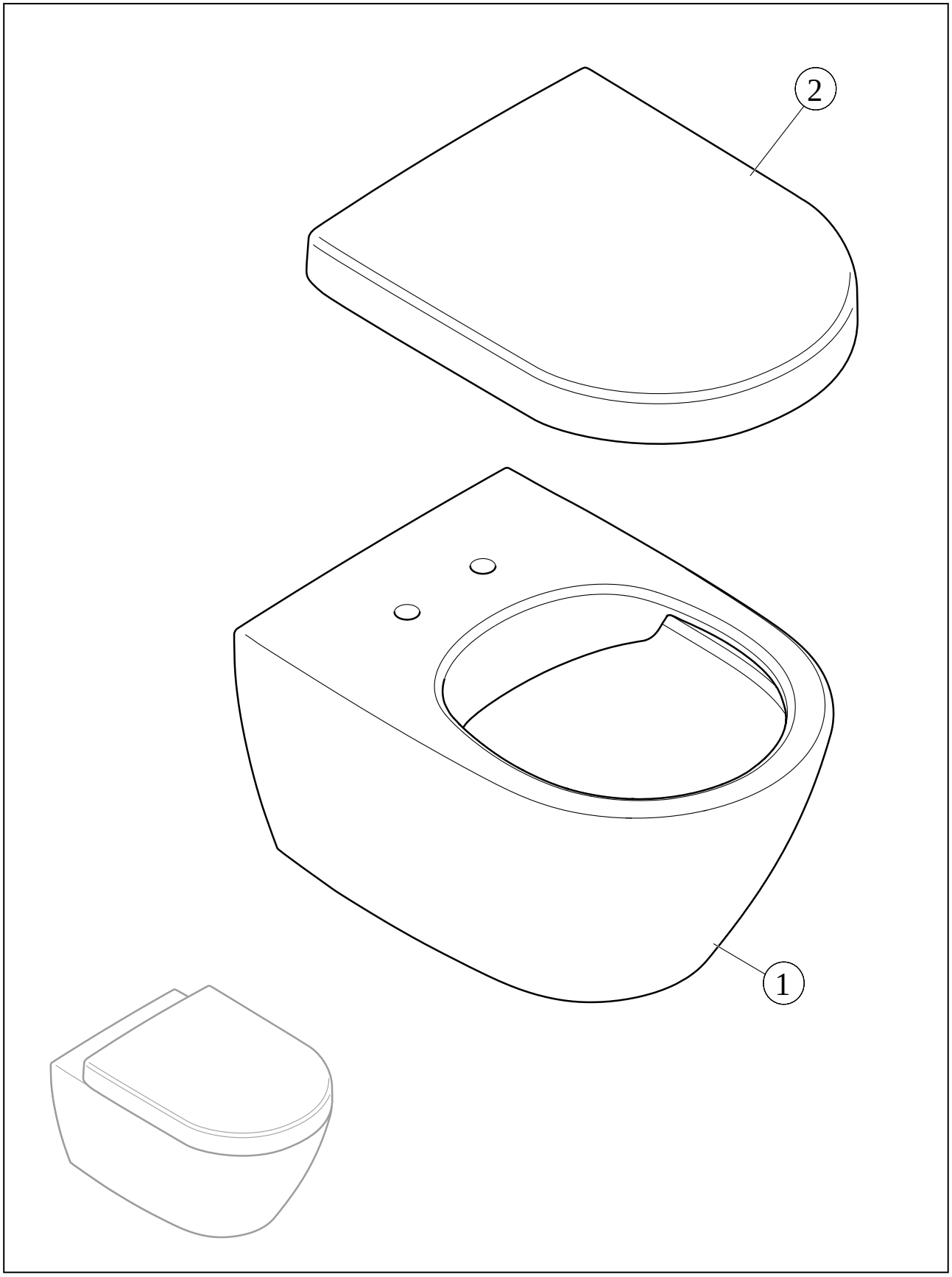

BILL OF MATERIALS

No.	Article No.	Description	Quantity
1	5685R0R1	Washdown toilet, rimless	1
2	9M58S101	Toilet seat and cover	1